70921-00001.B

i

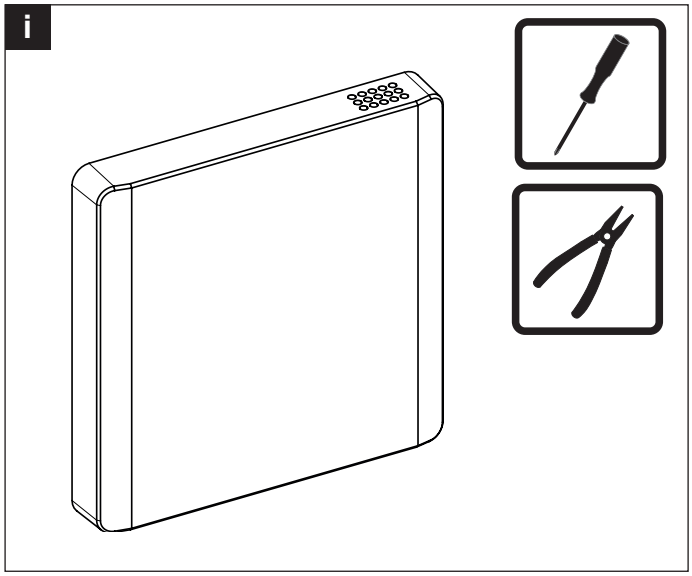

1

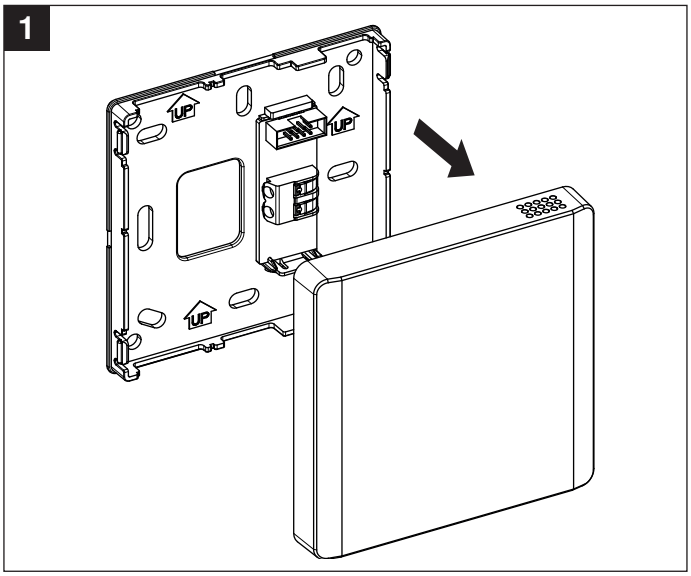

2a

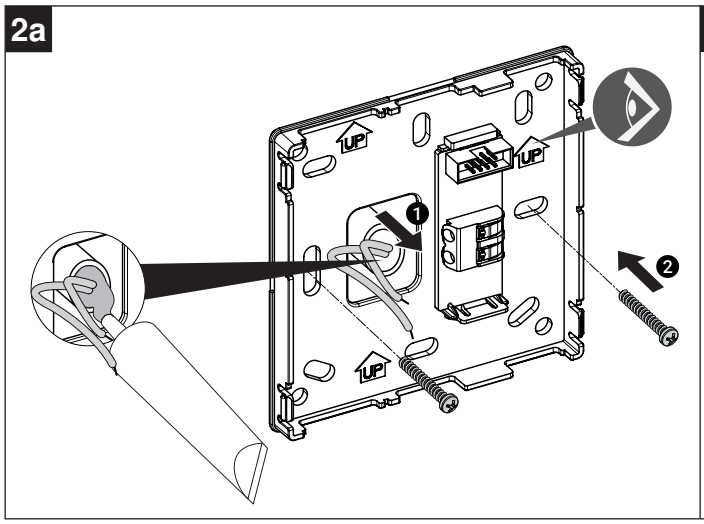

2b

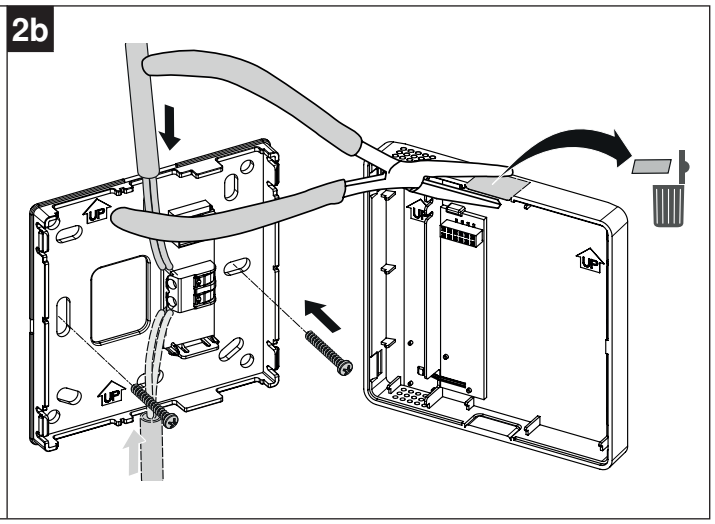

3

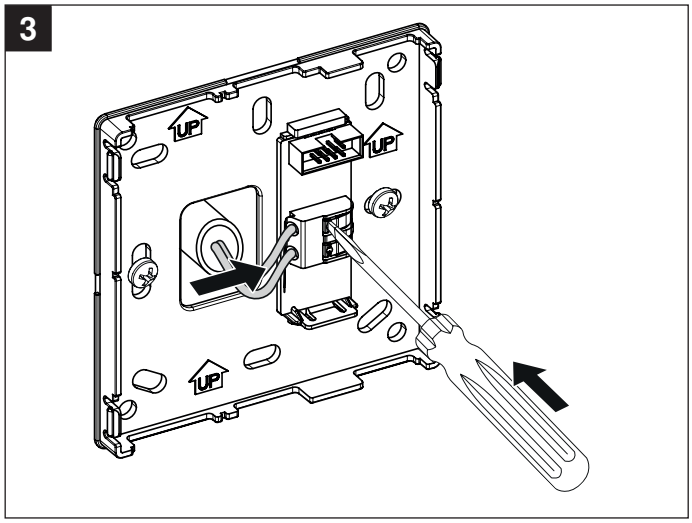

4

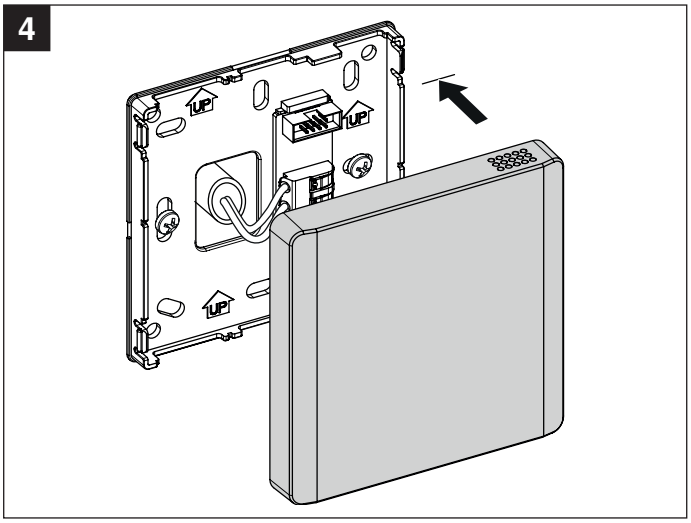

www.belimo.com

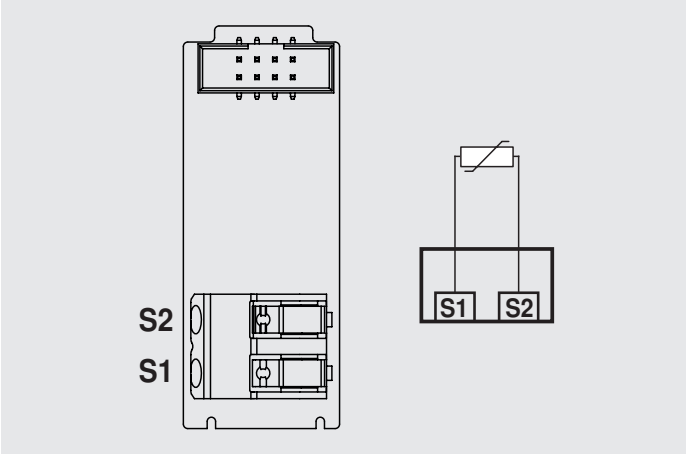
S2
S1
S1
S2

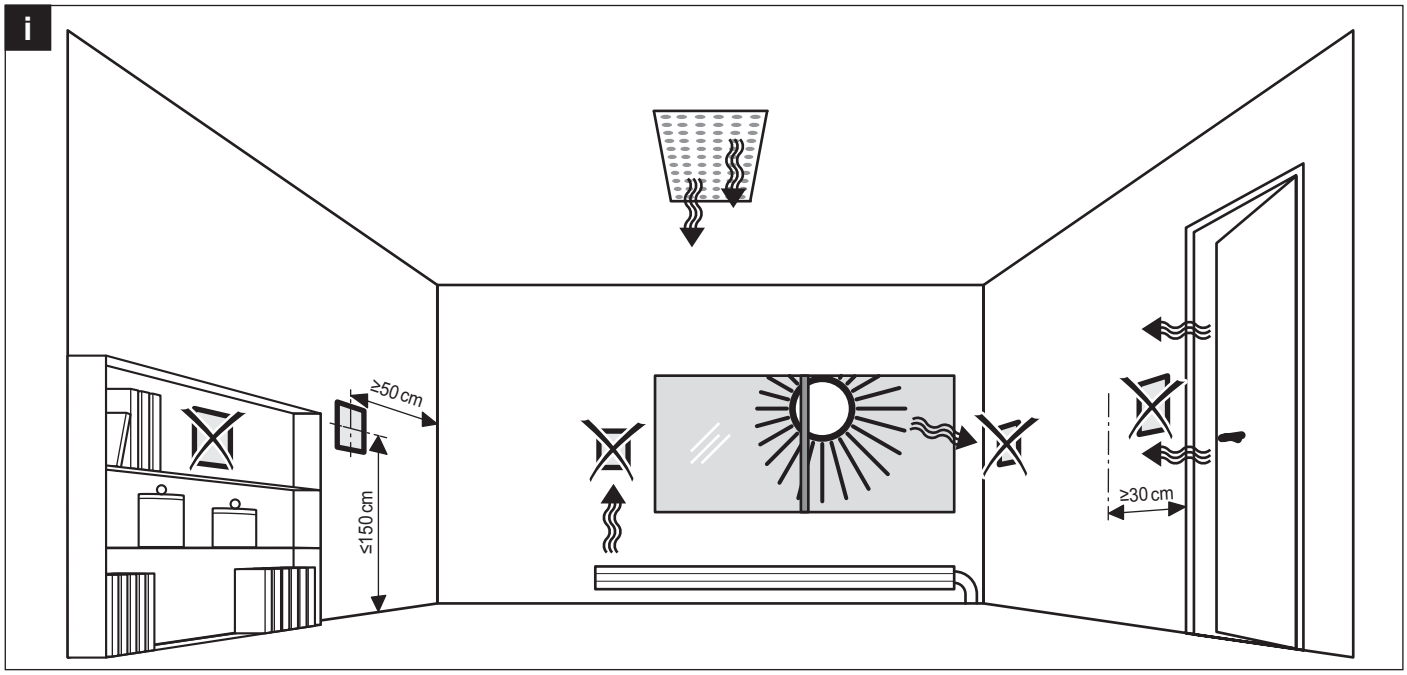
i
≥50 cm
≤150 cm
≥30 cm